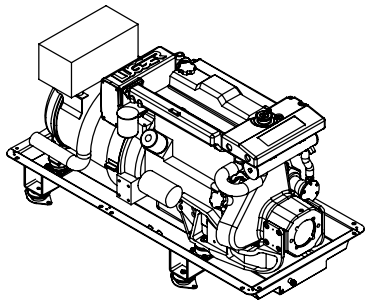

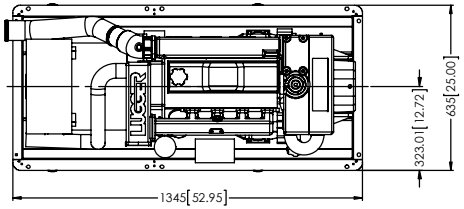

PLAN VIEW

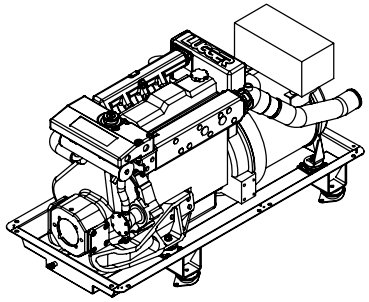

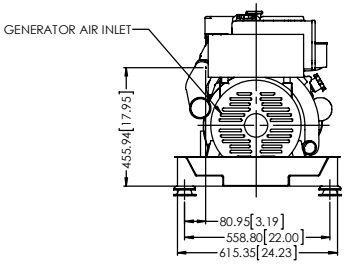

REAR VIEW

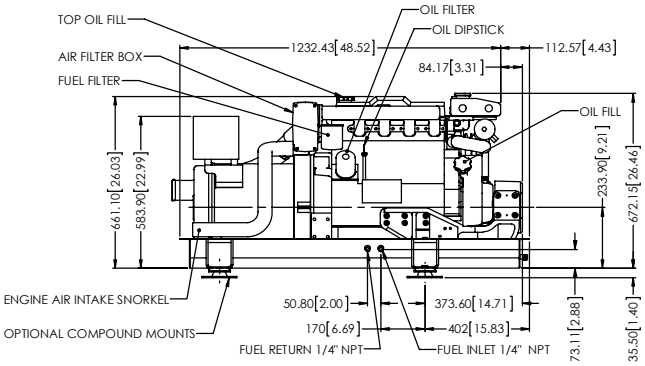

RIGHT (SERVICE) SIDE VIEW

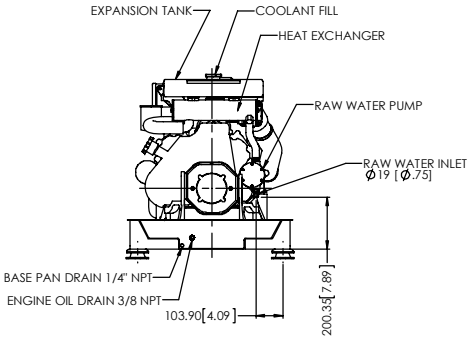

FRONT VIEW

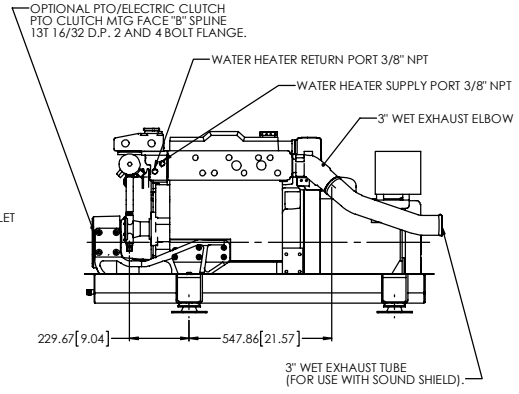

LEFT SIDE VIEW

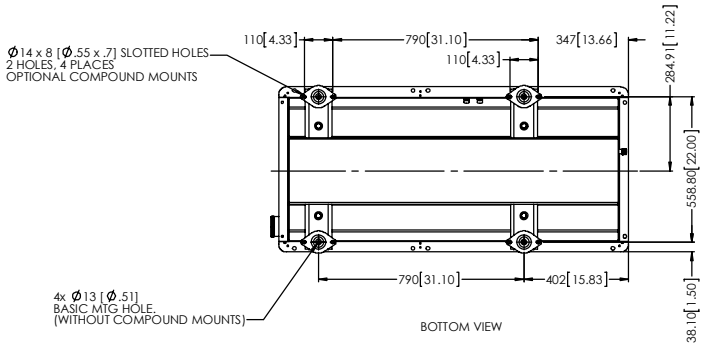

BOTTOM VIEW

TOTAL WEIGHT (WET): 444.5 kG. [979.8 LBS.]
ADD 29.5 kG [65 lbs] FOR PTO OPTION.

THIRD ANGLE PROJECTION

PROPRIETARY AND CONFIDENTIAL
INFORMATION CONTAINED IN THIS DRAWING IS THE SOLE PROPERTY OF NORTHERN LIGHTS. ANY REPRODUCTION IN PART OR AS A WHOLE WITHOUT THE WRITTEN PERMISSION OF NORTHERN LIGHTS IS PROHIBITED.

NEXT ASSY | USED ON
APPLICATION

UNLESS OTHERWISE SPECIFIED:
DIMENSIONS ARE IN MILLIMETERS
TOLERANCES:
ANGULAR: MACH ±0.5° BEND ±1.0°
X ±0.5
X.X ±0.3
INTERPRET GEOMETRIC TOLERANCING PER: ASME Y14.5M
MATERIAL
FINISH

	NAME	DATE
DRAWN	LTP	8/18/11
CHECKED		
ENG APPR.		
MFG APPR.		
Q.A.		

COMMENTS:

NORTHERN LIGHTS
4420 14th AVE. N.W.
Seattle, WA 98107
(206) 789-3880
www.northern-lights.com

TITLE:
INSTALLATION DIMENSIONS
M864W3

SIZE D | DWG. NO. D-4530 | REV
SCALE: 1:10 | WEIGHT: | SHEET 1 OF 1

D-4530 REV D